JETVENT® FANS
*Intelligent Ventilation*

# JVEC-SLP Super Low Profile
Submittal

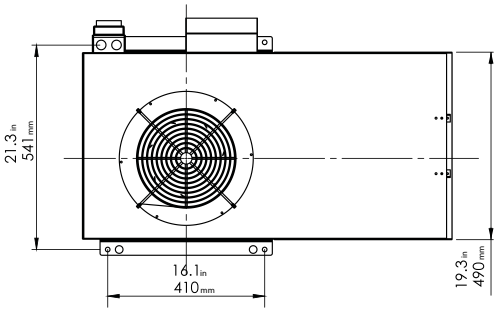


Bottom View

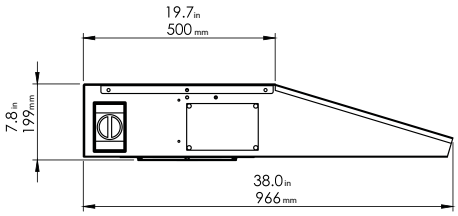


Side View

## Typical Specifications

The high-velocity jet induction fans shall be of the JetVent Fans JVEC Series by ZOO Fans® and shall be the model numbers shown on the schedule. Backward-curved centrifugal impellers, made from aluminum, shall be driven by full-variable speed EC external rotor motors with integrated EC controllers and integral thermal overload protection. Fans shall include lockable disconnect switch with three position lockout. Fan housings shall incorporate aerodynamically designed internal flow elements, be constructed of galvanized steel and incorporate mounting brackets.

## Fan Performance at Maximum Speed

| Sensor | Power | Thrust | Airflow | Free-Field Sound at 3 Meters |
|---|---|---|---|---|
| JVEC-SLP | 0.49 kW | 16 Newtons | 1142 CFM | 65 dBA |

## Control Mode

| Model | Description | Select |
|---|---|---|
| **Analog Control Configuration:** (default) | | |
| JVEC-SLP.ALG.V | 0-10VDC Analog Control | |

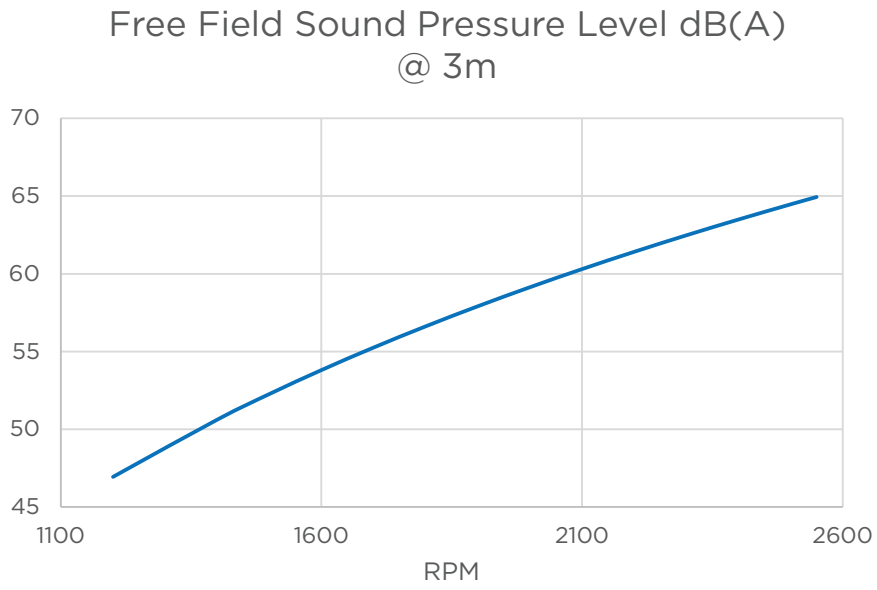


## Selection Table

| Model | Operating Level | Operating Range | | | | Quantity |
|---|---|---|---|---|---|---|
| JVEC-SLP<br>230V 1Ph<br>2.1 A 50/60Hz | Quiet | 30 to 100% | 1 to 16 N | 343 to 1142 CFM | 36 to 65 dBA | |
| | Engineer Specified Range | 30 to ____ % | 1 to ____ N | 343 to ____ CFM | 36 to ____ dBA | |

## JetVent Fan Schedule

| Tag | Model | Manufacturer | Motor Type | Weight (lbs) | Thrust (N) | Volts | RPM | Power (kW) | Current (A) | dBA | Control |
|---|---|---|---|---|---|---|---|---|---|---|---|
| **JVEC** | JetVent JVEC-SLP | ZOO Fans | Premium Efficiency EC | 53 | 16 | 208-240V 1Ph | 2550 | 0.49 | 2.1 | 65 | Fan control sequence can be continuous, staged, or proportional via 0-10VDC analog control signal |

**Notes:**

1. Integrated soft-start EC motor. Do NOT use external starter.
2. Fan speed to run proportional to sensor, BAS demand, or control signal. Refer to JetVent Fan Control Sequence.
3. dBA is Free-Field Sound level measured 3m from fan with multiple fans operating.
4. Sound measurements in accordance with ISO 13347.
5. Fans to be full variable-speed via 0-10VDC control signal.

## Project

| | | | | | |
|---|---|---|---|---|---|
| Job Name: | | | | Date: | |
| Job Address: | | | | | |
| City: | | State: | | Zip: | |
| Architect: | | | | | |
| Engineer: | | | | | |
| Contractor: | | | | | |

## Comments